SCALPEL Tips´n Tricks

In order to have the maximum fun with your Scalpel and to bring you the optimal performance on the track, here are some valuable tips on the assembly, tuning and installation of the RC-components.

1. Differential

The Scalpel differential works great with the grease contained in the Scalpel Box. But there are some points to be considered, to ensure optimal function.

a. Be careful not apply too much differential grease during assembly. Too much grease impairs the operation and smoothness of the diff. Too much grease also attracts too much dust in the differential, which leads to excessive wear to the diff.
b. Look at the correct installation direction of the disk shims. Incorrect installation of the disk shims limits the adjustability of the differential.
c. Tighten the differential nut carefully, if the differential nut is to firmly tightened, the differential will not operate effectively.
d. With stronger motors (Brushless) it is recommend to tighten the differential a little bit more otherwise the rear tires will break loose when accelerating.

2. Front wheels

Please check during assembly that the front wheels spin smoothly. Loosen the wheel nut slightly if the front wheels are not spinning smoothly.

3. Front knuckles

Due to the production process some items may not fit together properly. The front knuckles may be a little loose, in order to get the fit just right follow the following steps.

a. Degrease the metal parts (Wheel axle and the socket for steering axle)
b. Use red thread lock on the outside surface of the socket for the steering axle.
c. Use red thread lock in the cross hole of the wheel axle.
d. Now install the wheel axle and the socket for the steering axle with the front knuckles.
e. Carefully remove any excess thread lock fluid from all places on the knuckle.
f. Wait, until the thread lock is completely hardened.
g. Now assemble the steering arm onto your Scalpel and test to make sure the steering is moving freely.

Degrease the metal parts (Wheel axle and the socket for steering axle)
Use red thread lock on the outside surface of the socket for the steering axle.

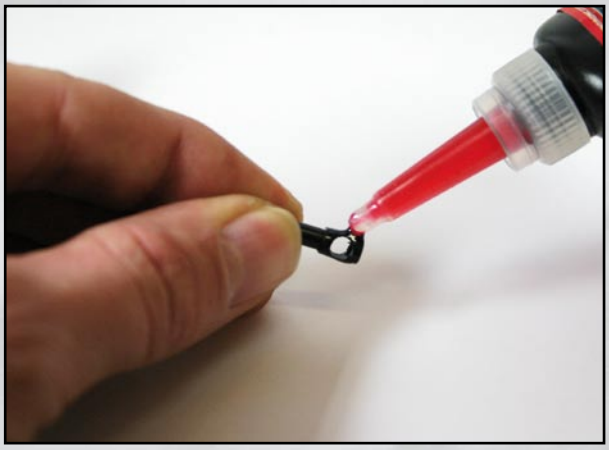

Use red thread lock in the cross hole of the wheel axle.

Now install the wheel axle and the socket for the steering axle with the front knuckles.
Carefully remove any excess thread lock fluid from all places on the knuckle.

Wait, until the thread lock is completely hardened.
Now assemble the steering arm onto your Scalpel and test to make sure the steering is moving freely.

4. Steering arms

Check the operation and smoothness of the steering arms. If the stop nut is too tight, loosen the stop nut for free movement.

5. Loose Adjusting nut of rear shock and Power Pod

While you drive, vibrations can loosen the adjusting nut of the rear shock and power pod. Apply thread lock on the internal thread of the adjusting nut during assembly.

6. Battery holder

Unfortunately a small description for the battery holder is missing in the instruction manual. The battery holder has different sized holes. Please find out which hole is smaller and larger before assembling the battery holder. The smaller hole belongs on the inside of the chassis, so that the pin can be pressed in firmly. The outside hole is larger, for easier changing of the batteries.

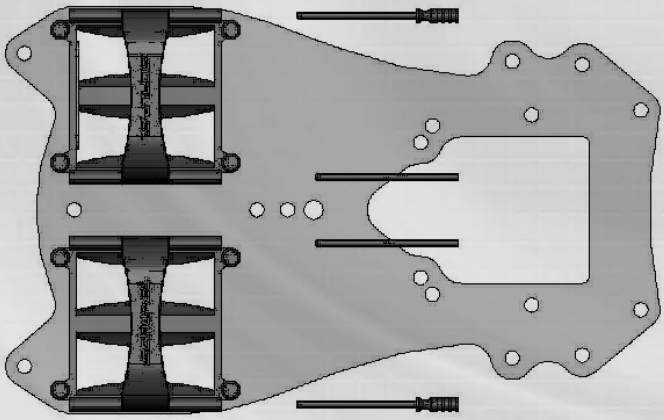

7. Servo-Size

The optimum Servo-Size is 30x30x12mm (H/L/D). Bore distance 36mm. During testing we had excellent results with the Hitec HS81MG-Servo. If you don't like to cut your servo to countersink it into the chassis, you can also put some washer under the Servo mount.

8. Radio gear installation

In order to get maximum handling from your new kit you want to pay close attention when installing your radio gear. Avoid cable tangle, use nylon zip-ties for clean wiring. Loose cables that rub on the body, or against any moving parts on the care will affect the handling in a negative way.

Very important! Route the motor cables so that the power pod can move freely in all directions.
Be sure to check movement of the rear pod with the body installed, use of larger connectors can restrict the rear pod movement.

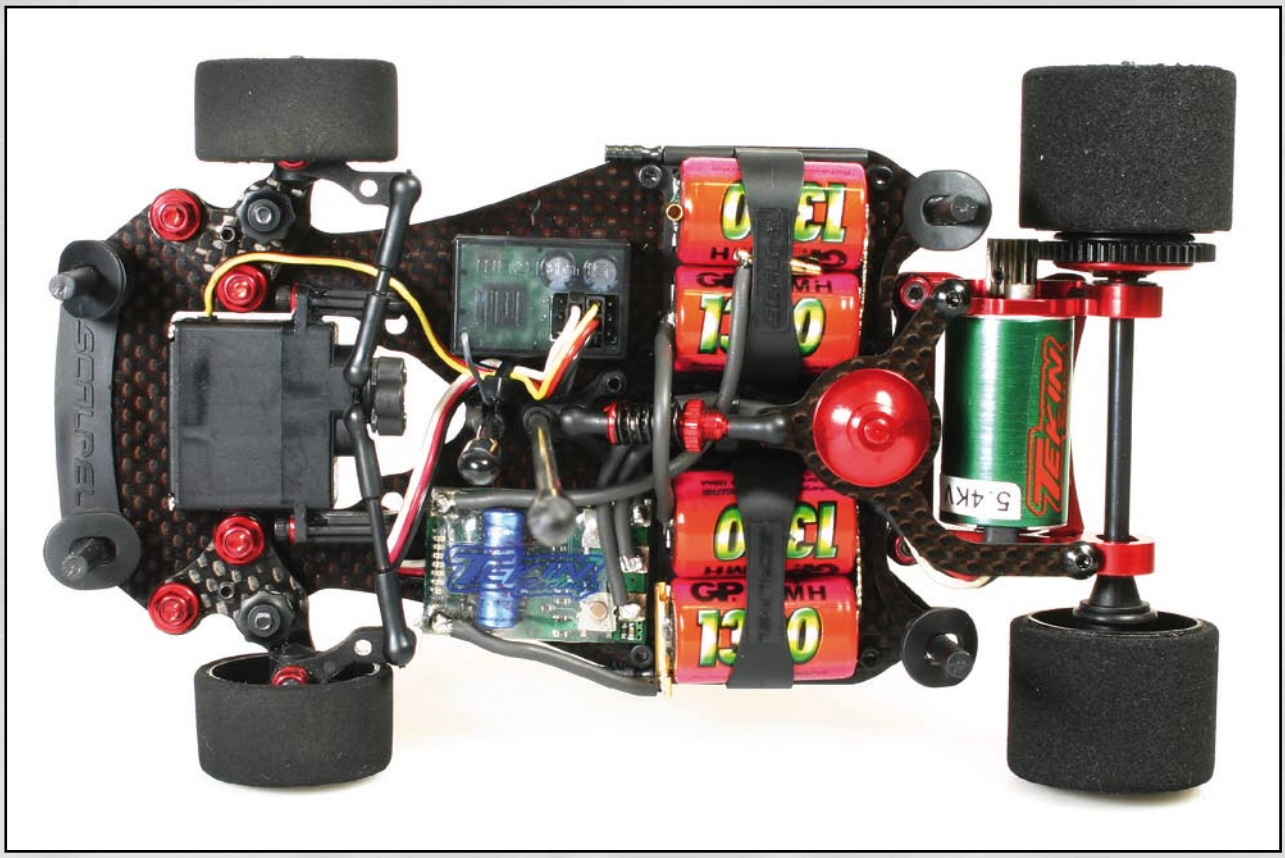

9. Battery Connections
Only use battery connectors for 2/3A cells to ensure a proper function.
Route your battery cables as shown in the picture.
The battery should always be set in the chassis with some free play to avoid any chassis tweak.

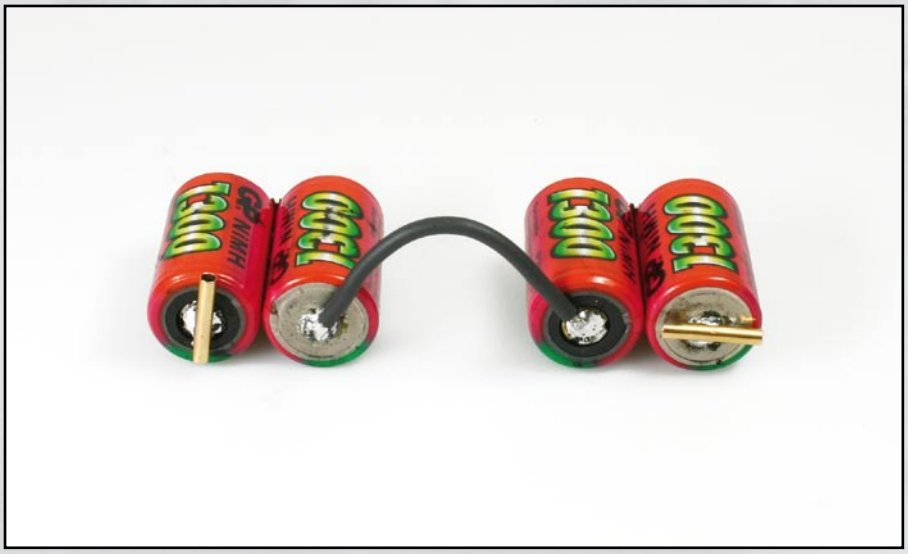

10. Optimal Installation of a Brushless system

If you would like use a brushless system in your SCALPEL, you need the special brushless motor mount (RA2069)to use a brushless system from MAMBA or TEKIN. In the picture you can see a TEKIN RAGE brushless system installed in the SCALPEL. This System fits better in the vehicle, if you remove the housing from the Speedo and enclose it in heat shrink. In order to achieve cleaner wiring, the switch was removed from the Speedo and replaced by a short bridge. Likewise you can remove the plugs between the engine and Speedo and solder them directly.

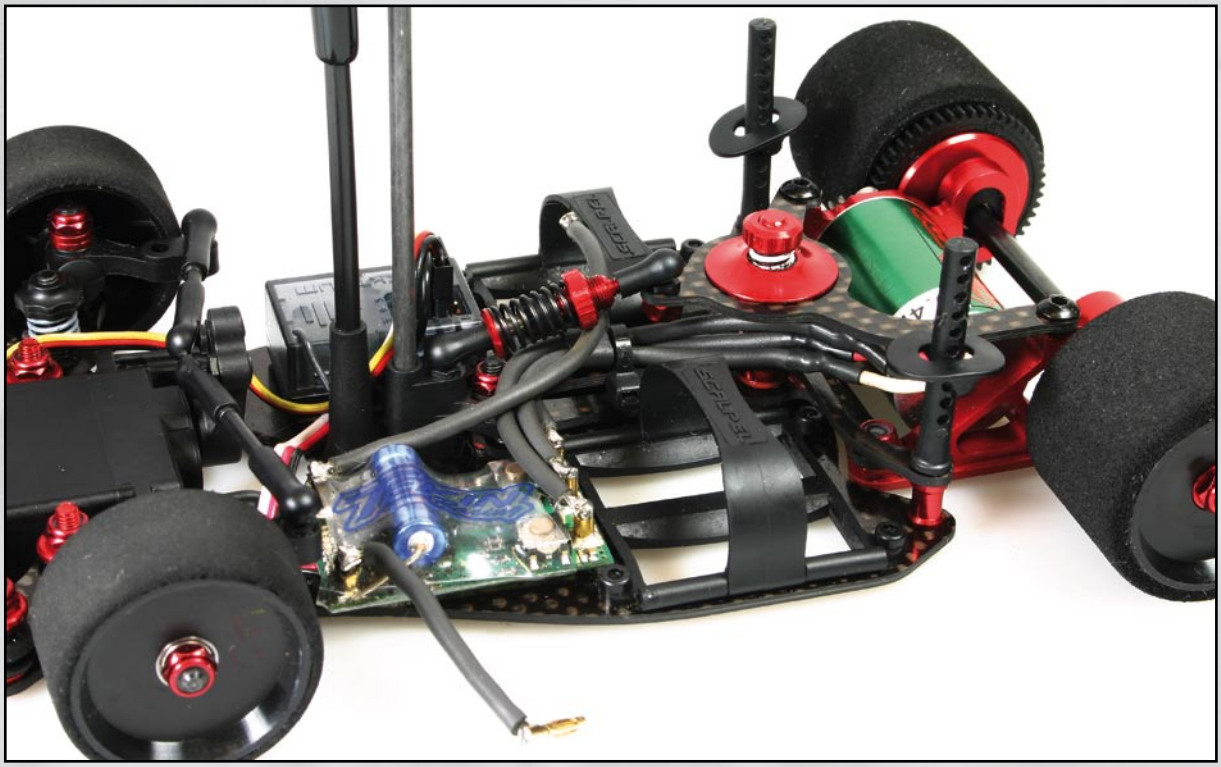

11. Vehicle settings

Here are some important fundamental tips to help set up your new Scalpel.

TWEAK

Follow the sequence of steps in order to adjust the tweak of the Scalpel correctly. This will ensure that you set up your kit so that it is easier to handle and will drive straight forward.

a. ***Front axle:*** Adjust the wheel camber to approximately 0° with the help of the suspension rebound movement set-screws.
b. Adjust the pressure of the spring to be equal on the left and right site.
c. Set the chassis on a surface that allows the front axles to extend down as far as possible. Use the set screws on the arms to adjust the ride height so that both front arms travel down the same amount.
d. Check the camber of both front wheels again, readjust to 0° if necessary.
e. Next check the toe-in of the front axle. Optimal is 0°.
f. Ride Height: Set the vehicle on a level surface with the wheels on and check the ride height. The ride height should be approximately 3-4mm. If necessary you can change the ride height by using the washers at the knuckle. To adjust the rear ride height you can change out the transmission plates.
g. ***Rear axle:*** Loosen the nut on the friction disk absorption system, in order to allow friction free movement of the power pod. Raise the chassis off the ground so that the wheels are touching. (During this procedure the front wheels should be touching the ground at all times.) If the rear wheels touch at the same time, the power pod is perfectly adjusted. If one rear wheel touches first, you have to correct it with the adjusting screws at the t-bar, until both rear wheels touch the ground at the same time.

Vehicle Set up on the Track
After you have tweaked the Scalpel correctly, you can move on to setting up your kit on the track.

Steering adjustment
Limit the right/left balance of steering so that the vehicle drives with full steering angle equally left and right.
A good value for cornering is a turning radius of approx. 50cm.

Spring pressure on the front suspension arms
Adjust the pressure of the front springs to that the suspension rebound movement set-screw reaches the chassis if the suspension arm is released.

Spring pressure on the middle absorber
Adjust the knurled nut from the absorber so, that the chassis does not sag when viewed from the side.

Friction disk absorption system
Apply some differential grease under both friction disks, in order to ensure free movement of the friction disk system. On a fast track with higher grip give more pressure on the springs for the friction disks. On lower traction tracks you can try it without grease and less pressure.

Tires
Always use tire traction sauce, if this is permitted on your racing course. Always use it on the rear tires. The front tires should be lubricated depending on mixture and grip of the track, but only up to the half (internal half of the tire). Apply the tire traction sauce and let sit at least 10-20 minutes. Dry the tires before you start driving on the track.

If your Scalpel is too aggressive to drive it is advisable to apply super glue (CA) to the outside of the front tires. This reduces the front axle grip and makes the vehicle easier to drive on difficult tracks (carpet condition).

If the front tires wear in a conical pattern after a while, you should adjust the camber. The front axle is optimally adjusted, if the front tires wear evenly across the tire.